















# Venieri UMAK

## MULTIFUNCTIONAL MACHINES

8.23G | 10.23E




## ALWAYS CLEAN AIR

The new air cleaning system offers you a two-stage filtration through high-efficiency primary filters and safety filters that can be integrated with a **"cyclone" pre-filter** for maximum engine protection.

## DEUTZ ENGINE TIER 4f

The new **Deutz** engine complies with the latest emission standards delivering high torque at low rpm.

## AUTOMOTIVE DISK BRAKE SYSTEM

The **split double braking system** (optional on VF 8.23F), operating on each single axle, guarantees the machine a **minimum braking distance**.

## TYRE RANGE FOR ANY KIND OF APPLICATION

**Wide range of tyres** selected for any kind of terrain and application, both **industrial** and **agricultural**.

## TOTAL STABILITY

The oscillating rear axle, fixed to the frame with **unlimited duration**, **maintenance-free** supports and controlled by a double-acting cylinder, functions as a damper and suspension **block to ensure total stability**.

## CLOSE ATTENTION TO FUEL SAVING

The new electrically controlled **dual speed cooling** fan adjusts the rotation speed according to all working conditions, **reducing the average fuel consumption (8% approx.) and noise (12 dB approx.).**

## TWO MACHINES IN ONE

New completely redesigned linkage for **maximum breakout and lifting force**, which are impossible to find in a traditional backhoe with parallel linkage. In addition, **we guarantee full attachments interchangeability with our previous models and main competitors**.



## LOADER ARM SPEED

The **energy recovery** function eliminates all the "downtimes" in the lowering of the boom, thus **improving its response time and performance**.

## CENTRAL ARTICULATION

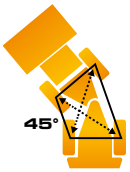


Tight curves, slight slopes, each job is different. Thanks to the central articulation, the machine **can easily operate even in tiny spaces.**

## BE COOL

The **brand-new ventilation system** guarantees the operator maximum comfort. You can choose between the **automatic climate control** or the **air conditioner**, thus obtaining the **perfect temperature** inside your cabin.

## 360° 3D VIEW




Full control of the whole working area as well as front and rear attachments, thanks to the **360° visibility** of the Venieri Cabin (certified ROPS/FOPS II° level).

## NO LIMITS FOR ADDITIONAL ATTACHMENTS

The new ***High Flow Kit*** allows a **42% increase of oil flow to the attachment versus the standard one.**

## HYDRAULIC ADDITIONAL CIRCUITS




The front and rear part of **the machine can be simultaneously equipped with a number of different hydraulic circuits** to perform **any kind of job**.

## HYDROSTATIC TRANSMISSION

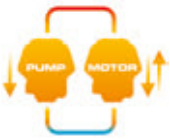


Compared with a traditional PowerShift, **high-pressure Bosch-Rexroth hydrostatic transmission with automatic change** improves the machine's performance in terms of **towing force, speed and reduced fuel consumption.**

# 8.23G
## MUTIFUNCTIONAL MACHINE
## ARTICULATED

## DIESEL ENGINE

Engine: inline-four cylinder, turbocharged, charge air cooling, Common Rail injection system electronically controlled, external exhaust gas recirculation, water cooled, dry filtration, oxidation catalyst (DOC) diesel particulate filter (DPF), selective catalytic reduction (SCR). Emissioned according to CEE 97/68 Tier 4f.

| | |
|---|---|
| Type | Deutz TCD 3.6 L4 |
| Max power | 78 kW - 106 HP |
| Rated RPM | 2.300 |
| Power ISO/TR 14396 | 74,4 kW - 101 HP |
| Power EEC 80/1269 | 74,4 kW - 101 HP |
| Max torque | lbf ft 302.4 |
| Bore | in 3.86 |
| Stroke | in 4.72 |
| Displacement | $in^3$ 221 |

## ELECTRIC SYSTEM

| | |
|---|---|
| Battery | 12 Volt |
| Capacity EN 60095-1 | 110 Ah - 1100 A |
| Alternator rating | 95 A |
| Reverse warning | Standard |
| Wiring according with | IP 67 DIN 40050 |

## TRANSMISSION

Hydrostatic transmission with automatic power regulation and closed circuit with variable displacement pump and motor. Gearbox with 2 mechanical selections: 2 work speeds (fwd/rev) and 2 road speeds (fwd/rev).

| ***Work speed*** | Forward | Reverse |
|---|---|---|
| 1st gear mph | 0÷4 | 0÷4 |
| 2nd gear mph | 0÷8 | 0÷8 |
| ***Road speed*** | Forward | Reverse |
| 1st gear mph | 0÷11 | 0÷11 |
| 2nd gear mph | 0÷25 | 0÷25 |

## AXLES

Designed for Heavy Duty • All-wheel drive • Planetary final drives in each wheel.
*Front axle*: rigid • *Rear axle*: oscillating up to a total angle of 20° and "Limited Slip" differential. Hydraulic locking device on the rear oscillating axle.

## BRAKES

Service: Multi disc oil brakes on rear axle working on all the wheels.
Parking: mechanical brake operating on the transmission shaft manually actuated.

## TYRES

| | |
|---|---|
| Standard | 16/70 - 24 |
| Option | 15-22.5 • 405/70 R24 |

## STEERING

Central articulated frame with servo assisted through LOAD SENSING.

| | |
|---|---|
| Total steering angle | 70° |
| Inner tyres turning radius | ft in 9'10.11" |
| Outer tyres turning radius | ft in 16'8.39" |
| Outer bucket turning radius | ft in 17'11.55" |

## HYDRAULIC SYSTEM

Composed of two gear pumps, the first for the loader circuit and steering, the second for the circuit of the fan, having a double speed of rotation. "**Combined Flow**" circuit for feeding the rear control valve.Modular two-element control valve for the loader, modular six-element control valve for the backhoe regenerative type. Double acting hydraulic cylinder. Cylinder 1st backhoe arm with brake at maximum height. Hydraulic oil cooling radiator.
Full-flow oil filter on the leakage pipe.

| | | |
|---|---|---|
| Standard flow | gpm | 23.25 |
| Max flow | gpm | 33.02 |
| Loader relief valve pressure | psi | 3,336 |
| Steering relief valve pressure | psi | 2,538 |
| Lift cylinder | in | 3.35x22.83 |
| Bucket cylinder | in | 3.54x15.83 |

***Loader control***
Single lever arm-control with 4-position lifting system and with 3-position bucket system.

***Backhoe control***
Two levers backhoe control, "cloche" type.
Two hydraulic-control indipendet stabilizers.
Side translation with four hydraulic locking devices.

## SERVICES CAPACITIES

| | | |
|---|---|---|
| Engine | gal | 2.11 |
| Front axle + gear box | gal | 2.77 |
| Rear axle | gal | 2.43 |
| Hydraulic circuit | gal | 22.45 |
| Brake system | gal | 0.16 |
| Fuel | gal | 21.66 |
| Water cooling | gal | 6.34 |
| Ad Blue | gal | 5.28 |

## TECHNICAL FEATURES

***Loader***

| | | |
|---|---|---|
| Standard bucket capacity | $yd^3$ | 1,44 |
| Bucket width | ft in | 7'2.61" |
| Breakout force | lb | 15,212 |
| Lifting capacity on the bucket pin up to max height | lb | 9,039 |
| Dump clearance | ft in | 11'0.28" |
| Dump height at 40° | ft in | 8'10.69" |
| Reach at 40° | ft in | 2'7.5" |

***Backhoe Loader***

| | | |
|---|---|---|
| Type | VF | 4.35C |
| Standard bucket capacity | gal | 39.63 |
| Bucket width | in | 19.69 |
| Dipperstick max penetration capacity | lb | 5,622 |
| Max breakout force on the bucket type | lb | 10,053 |
| Lifting capacity on the bucket pin up to max height | lb | 3,086 |
| Rotating | | 180° |
| A - Max digging depth | ft in | 15'1.1" |
| B - Standard digging depth (SAE) | ft in | 14'1.29" |
| C - Max digging depth with telescopic (opt.) | ft in | 17'8.6" |
| D - Standard digging depth with telescopic (opt) | ft in | 16'8.79" |

## DIMENSIONS AND WEIGHT

| | | |
|---|---|---|
| Max lenght in transfer position | ft in | 19'10.18" |
| Max width in transfer position | ft in | 7'2.61" |
| Width across tyre | ft in | 6'9.1" |
| Tracks width | ft in | 5'4.96" |
| Maximum height (Standard arm) | ft in | 11'5.8" |
| Ground clearance | in | 14.37" |
| Standard weight in running order | lb | 16,535 |
| Max weight | lb | 18,717 |

### Loading bucket (lb)

| | |
|---|---|
| Static tipping load, full turn | 11,574 |
| Payload (50%) | 5,787 |

### Loading fork (lb) - centre of gravity 19.69”

| | |
|---|---|
| Static tipping load, full turn | 8,598 |
| Payload EN 474-3 (80%) | 6,878 |
| Payload EN 474-3 (60%) | 5,159 |
| Payload DIN 24094 (50%) | 4,299 |



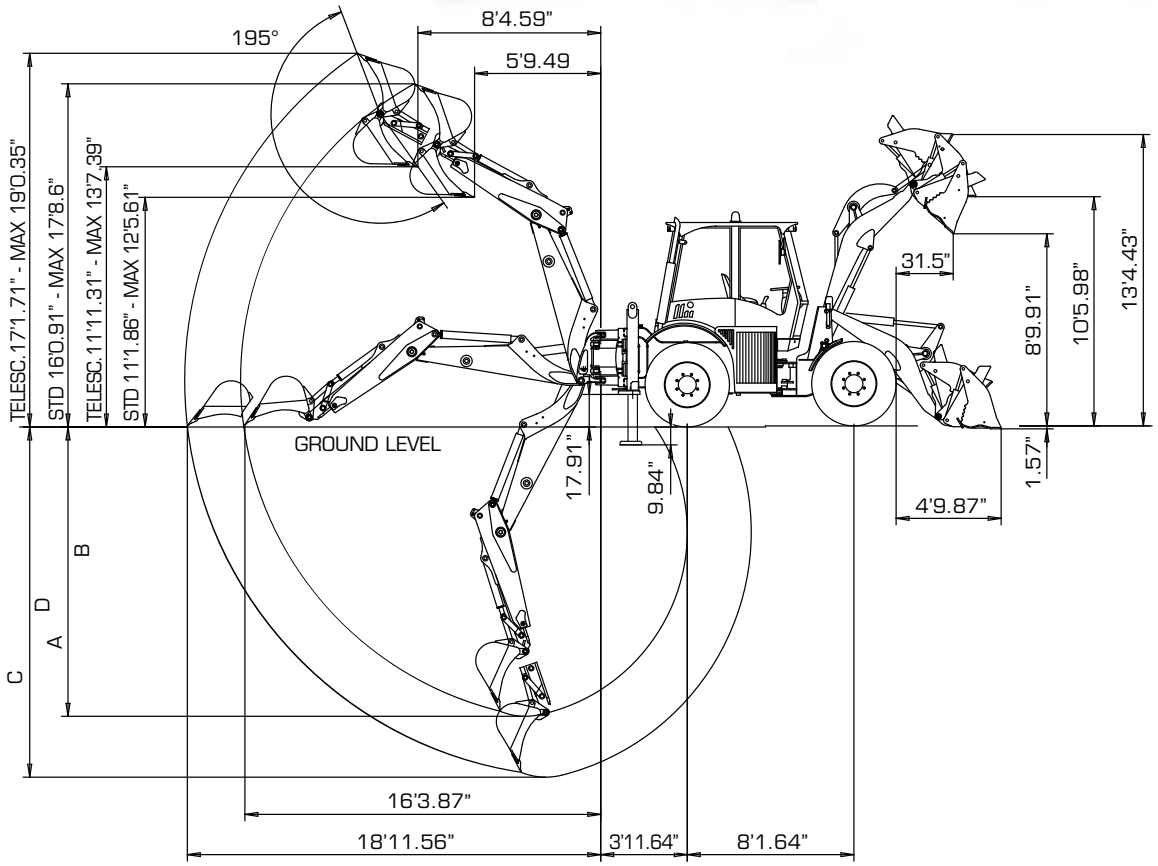


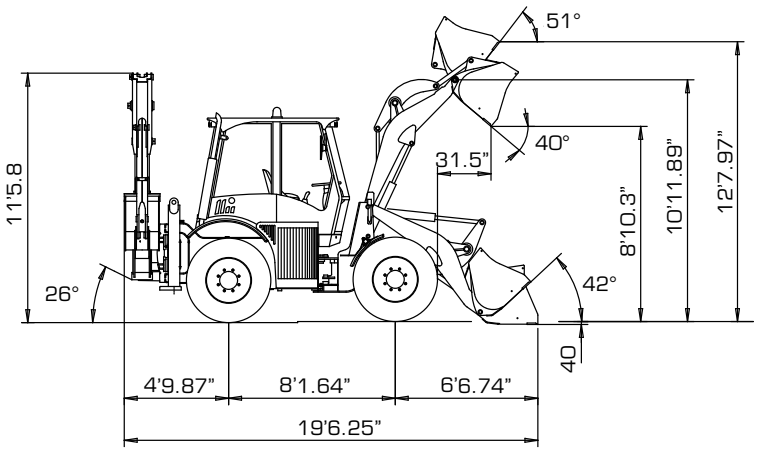


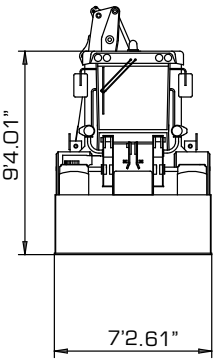


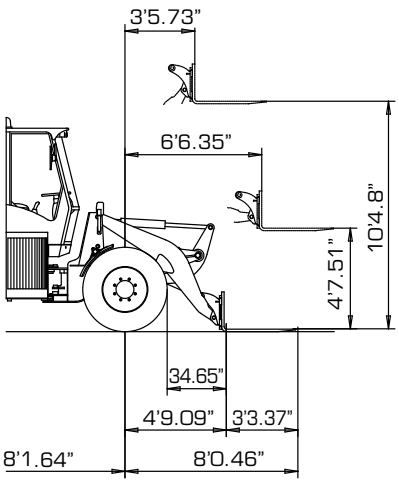

# 10.23E

## MUTIFUNCTIONAL MACHINE
## ARTICULATED

## DIESEL ENGINE

Engine: inline-four cylinder, turbocharged, charge air cooling, Common Rail injection system electronically controlled, external exhaust gas recirculation, water cooled, dry filtration, oxidation catalyst (DOC) diesel particulate filter (DPF), selective catalytic reduction (SCR). Emissioned according to CEE 97/68 - Tier 4f.

| | | |
|---|---|---|
| Type | | Deutz TCD 3.6 L4 |
| Max power | | 78 kW - 106 HP |
| Rated RPM | | 2.300 |
| Power ISO/TR 14396 | | 74,4 kW - 101 HP |
| Power EEC 80/1269 | | 74,4 kW - 101 HP |
| Max torque | lbf ft | 302.4 |
| Bore | in | 3.86 |
| Stroke | in | 4.72 |
| Displacement | $in^3$ | 221 |

## ELECTRIC SYSTEM

| | |
|---|---|
| Battery | 12 Volt |
| Capacity EN 60095-1 | 110 Ah - 1100 A |
| Alternator rating | 95 A |
| Reverse warning | Standard |
| Wiring according with | IP 67 DIN 40050 |

## TRANSMISSION

Hydrostatic transmission with automatic power regulation and closed circuit with variable displacement pump and motor. Gearbox with 2 mechanical selections: 2 work speeds (fwd/rev) and 2 road speeds (fwd/rev).

| ***Work speed*** | Forward | Reverse |
|---|---|---|
| 1st gear mph | 0÷4 | 0÷4 |
| 2nd gear mph | 0÷8 | 0÷8 |
| ***Road speed*** | | |
| 1nd gear mph | 0÷11 | 0÷11 |
| 2nd gear mph | 0÷25 | 0÷25 |

## AXLES

Designed for Heavy Duty • All-wheel drive • Planetary final drives in each wheel.
*Front axle*: rigid • *Rear axle*: oscillating up to a total angle of 20° and "Limited Slip" differential. Hydraulic locking device on the rear oscillating axle.

## BRAKES

Service: hydraulic multi-disk oil brakes on each wheels with two separate circuits.
Parking: band-type on the split outlet hand-operated.

## TYRES

| | |
|---|---|
| Standard | 17.5L 24 |
| Option | 15.5-25 • 15R 25 • 405/70 R24 • 19.5L 24 |

## STEERING

Central articulated frame with servo assisted through LOAD SENSING.

| | | |
|---|---|---|
| Total steering angle | | 70° |
| Inner tyres turning radius | ft in | 9'11.29" |
| Outer tyres turning radius | ft in | 17'5.13" |
| Outer bucket turning radius | ft in | 18'6.91" |

## HYDRAULIC SYSTEM

Composed of two gear pumps, the first for the loader circuit and steering, the second for the circuit of the fan, having a double speed of rotation. "**Combined Flow**" circuit for feeding the rear control valve. Modular two-element control valve for the loader, modular six-element control valve for the backhoe regenerative type, with unloading valve for reducing consumption during transfer. Double acting hydraulic cylinder. Cylinder 1st backhoe arm with brake at maximum height. Hydraulic oil cooling radiator. Full-flow oil filter on the leakage pipe.

| | | |
|---|---|---|
| Standard flow | gpm | 27.74 |
| Max flow | gpm | 38.3 |
| Loader relief valve pressure | psi | 3,626 |
| Steering relief valve pressure | psi | 2,538 |
| Lift cylinder | in | 3.54x26.18 |
| Bucket cylinder | in | 4.33x17.52 |

***Loader control***
Single lever arm-control with 4-position lifting system and with 3-position bucket system.

***Backhoe control***
Two levers backhoe control, "cloche" type.
Two hydraulic-control indipendet stabilizers.
Side translation with four hydraulic locking devices.

## SERVICES CAPACITIES

| | | |
|---|---|---|
| Engine | gal | 2.11 |
| Front axle | gal | 3.12 |
| Rear axle | gal | 3.12 |
| Gear box | gal | 0.42 |
| Hydraulic circuit | gal | 22.45 |
| Brake system | gal | 0.53 |
| Fuel | gal | 31.17 |
| Water cooling | gal | 6.34 |
| AdBlue | gal | 5.28 |

## TECHNICAL FEATURES

***Loader***

| | | |
|---|---|---|
| Standard bucket capacity | $yd^3$ | 1,70 |
| Bucket width | ft in | 7'8.52" |
| Breakout force | lb | 23,810 |
| Max hydraulic lifting capacity at maximum height | lb | 12,787 |
| Dump clearance | ft in | 11'5.8" |
| Dump height at 42° | ft in | 9'2.24" |
| Reach at 42° | ft in | 2'6.51" |

***Backhoe loader***

| | | |
|---|---|---|
| Type | VF | 4.65B |
| Standard bucket capacity | gal | 52.83 |
| Bucket width | in | 23.62 |
| Dipperstick max penetration capacity | lb | 10,362 |
| Max breakout force on the bucket type | lb | 13,448 |
| Lifting capacity on the bucket pin up to max height | lb | 4,850 |
| Rotating | | 180° |
| A - Max digging depth | ft in | 16'4.85" |
| B - Standard digging depth (SAE) | ft in | 15'1.1" |
| C - Max digging depth with telescopic (opt.) | ft in | 19'8.22" |
| D - Standard digging depth with telescopic (opt) | ft in | 18'4.47" |

## DIMENSIONS AND WEIGHT

| | | |
|---|---|---|
| Max lenght in transfer position | ft in | 20'2.13" |
| Max width in transfer position | ft in | 7'8.52" |
| Width across tyres | ft in | 6'10.68" |
| Tracks width | ft in | 5'4.96" |
| Max height (Standard arm) | ft in | 12'1.67" |
| Ground clearance | in | 13.78" |
| Standard operating weight | lb | 18,960 |
| Max weight | lb | 21,870 |

### Loading bucket (lb)

| | |
|---|---|
| Static tipping load, full turn | 13,558 |
| Payload (50%) | 6,779 |

### Loading fork (lb) - centre of gravity 19.69”

| | |
|---|---|
| Static tipping load, full turn | 10,692 |
| Payload EN 474-3 (80%) | 8,554 |
| Payload EN 474-3 (60%) | 6,415 |
| Payload DIN 24094 (50%) | 5,344 |



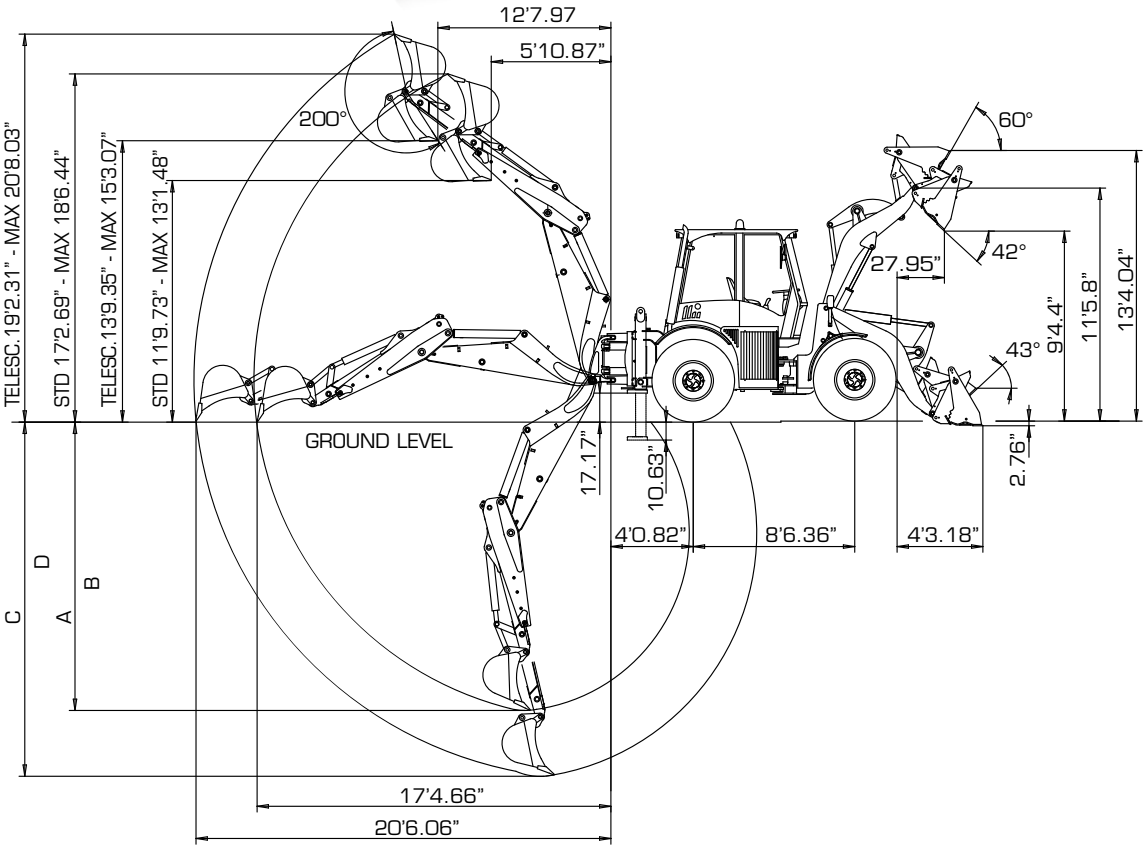


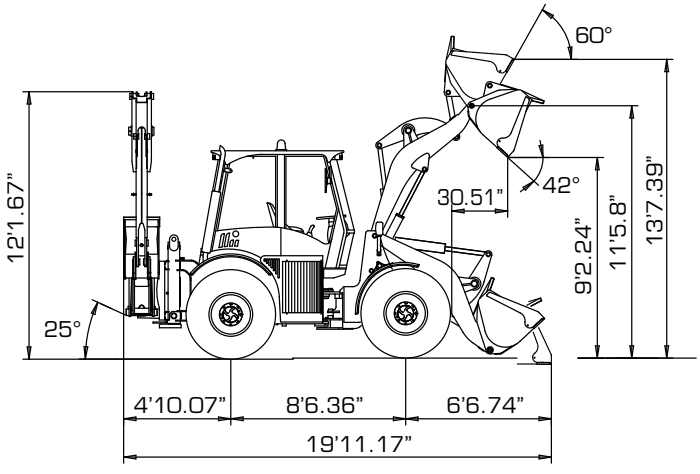


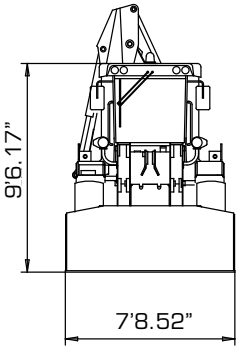


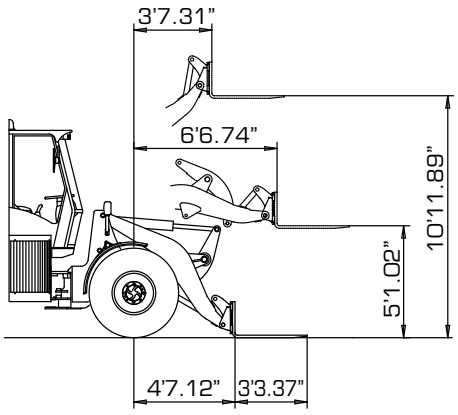

# Venieri UMAK

## WE HAVE RE-DESIGNED THE FUTURE OF BACKHOE LOADERS.

THE NEED TO COMBINE **HIGH PRODUCTIVITY** AND **PROFESSIONAL VERSATILITY** RESULTED IN THE **UMAK** REVOLUTION: THE NEW VENIERI MULTIFUNCTIONAL MACHINE

### HIGH PRODUCTIVITY

The Venieri UMAK can satisfy any purpose, thus replacing different traditional machines and allowing for significant **cuts in terms of maintenace and staff costs**.

### VERSATILITY, SPEED AND POWER

Thanks to the power of **hydrostatic transmission** and the efficiency of their **hydraulic system**, as well as the complete and full **disengagement of the rear excavator**, our multifunctional machines are authentic **universal tool carriers**. In addition, the engine is mounted in a transverse/central position to achieve an **equal distribution of the load on both axles**, better tipping over **resistance, towing force and stability with the lowest centre of gravity**.



### REDUCE CONSUMPTION AND SAVE THE ENVIRONMENT

The employment of a **single machine** to perform all tasks allows you to considerably **reduce the levels of fuel consumption, exhaust gas emissions and noise.**

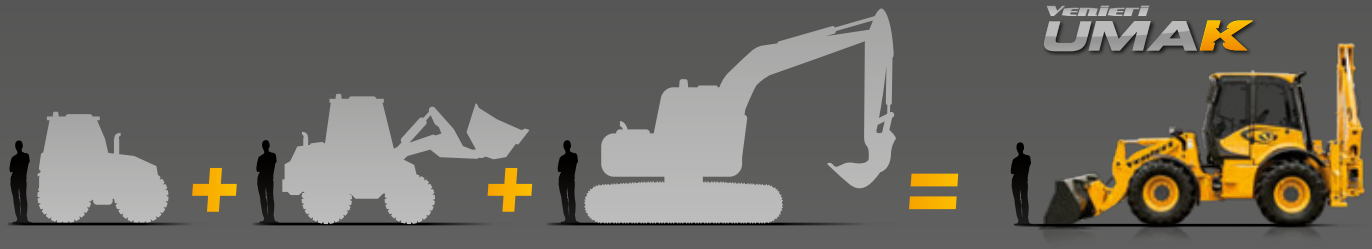


DIFFERENT MACHINES, MULTIPLE OPERATORS
FOR DIFFERENT PURPOSES

**1 MACHINE, 1 OPERATOR**
**FOR ANY PURPOSE**

# HYDROSTATIC TRANSMISSION

The **Power Management System (PMS)** developed by Venieri allows **balancing the power available, in favour of the attachment**. Using the Engine at maximum RPM, you can have the **maximum oil flow to the attachment** and, at the same time you can **adjust the speed, with precision of 1 km/h**; a function lacking in traditional transmissions.

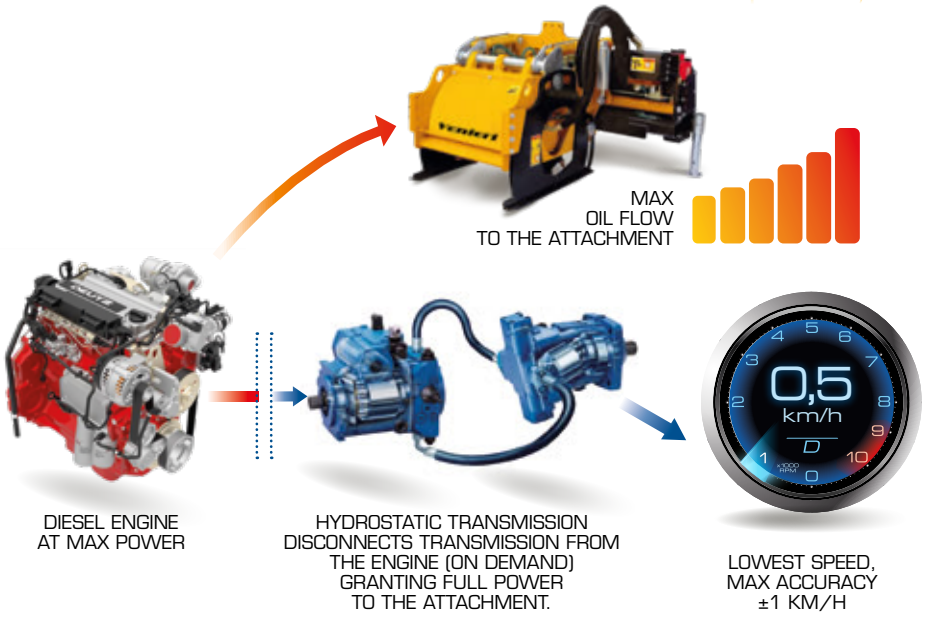


DIESEL ENGINE
AT MAX POWER

HYDROSTATIC TRANSMISSION
DISCONNECTS TRANSMISSION FROM
THE ENGINE (ON DEMAND)
GRANTING FULL POWER
TO THE ATTACHMENT.

LOWEST SPEED,
MAX ACCURACY
±1 KM/H



# PERFECT WEIGHT DISTRIBUTION

Thanks to a typical wheel loader's weight distribution, **40% on the front axle and 60% on the rear axle**, UMAK guarantees **maximum safety when working with bouncing attachments (ex. hydraulic shredder), with no need of additional stabilisers.**

# "MAX POWER" FLOW RATE

The **Bosch-Rexroth** hydrostatic transmission is made according with VENIERI specifications. Thanks to the "**automotive**" control, it automatically regulates the hydraulic flow and pressure depending on your working conditions: this **allows for maximum hydraulic power and limited consumption all the time**.



ASPHALT SOIL ROCK SAND SNOW



# TYRES RANGE FOR ANY KIND OF APPLICATION

Stability, traction control and wheel-terrain interaction: trust our experience in the field to choose the most suitable tyres range for any of your specific needs.

## 99 FUNCTIONS IN ONE JOYSTICK

The new cutting-edge joystick performs extremely well with all the **99 additional and homologated attachments.**

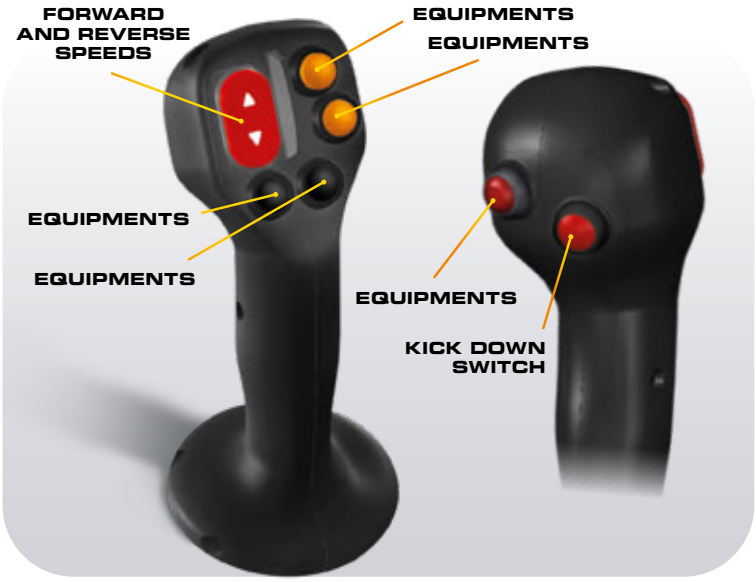


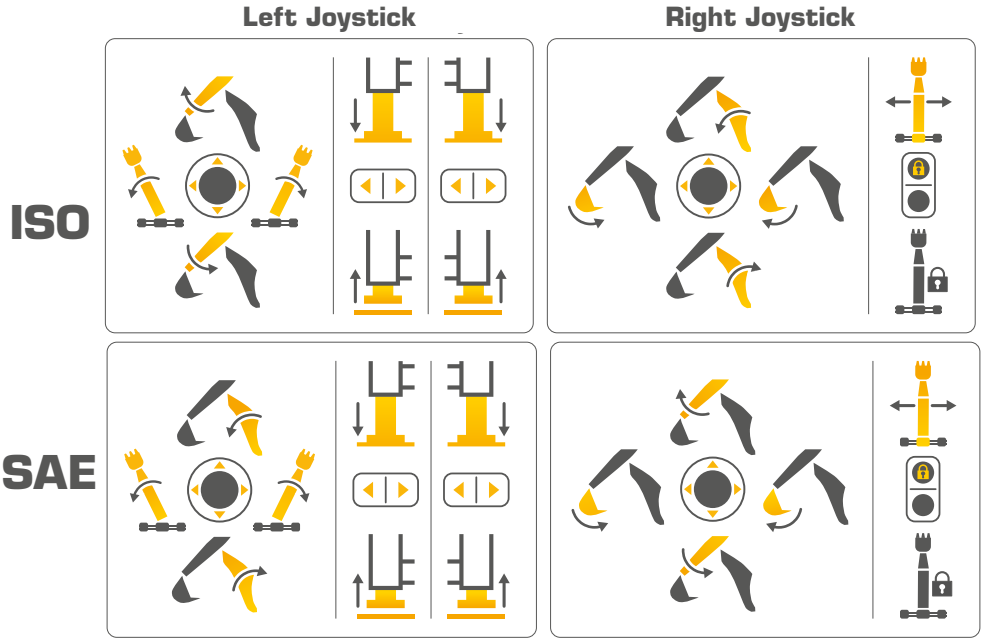


## REAR ISO OR SAE (PILOT)?

You can select which standard control can be used on Venieri machines between the followings: ISO or SAE (PILOT).

## REAR ARM DISENGAGEMENT

The plug and play system is now available. **Remove the backhoe safely every time you want to achieve every kind of purpose** (towing carnival floats, for example!)





# BENEFITS OF PROGRESS AND INNOVATION

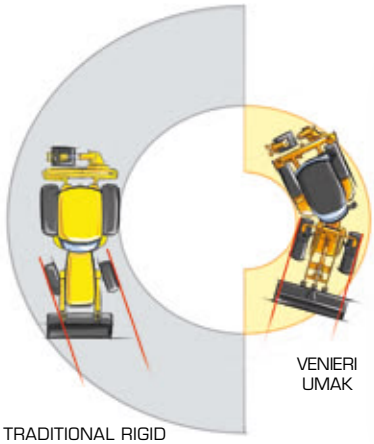


## EXTREMELY RADIUS STEERING ANGLE

The **central articulation** of our multifunctional machines allows an **extremely radius steering angle and the ongoing alignment of the front axle with the bucket,** thus improving their performance in terms of **flexibility and efficiency.**




## FLUSH TO THE WALL

With the rear standard bucket width of 19.69", our machines are able to dig flush to the wall, unlike the traditional ones.




## ENGINE CENTRAL POSITION

The **central/transverse** position of the engine on our multifunctional machines has several functions:

- It contributes to a better **weight distribution** on the axles
- It improves the machine's longitudinal/transverse **stability**, reducing travel dumping
- It allows for a **full view** of the working area due to the lack of bonnets (engine)
- **Extremely compact machine**

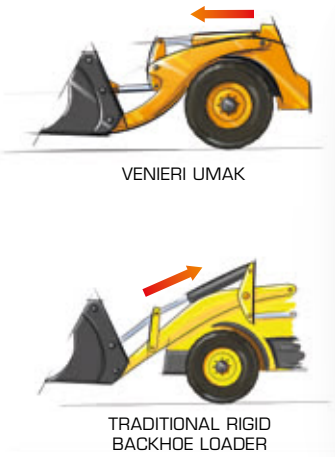


## "Z" LINKAGE

- Increased **breaking force** thanks to the use of bucket cylinders with a pushing instead of pulling function.
- Improved **visibility**
- Similar to wheel loader

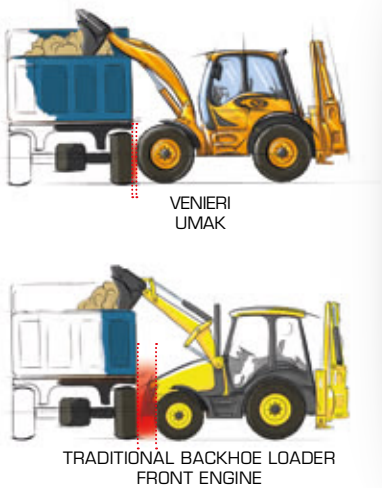


## MINIMUM DISCHARGE DISTANCE

The lack of engine bonnet grants protections and a **minimum discharge distance in all working conditions.**




## RADIATOR SIDE POSITION

The side/external-frame position of the radiator (2 speed cooling fan) guarantees a **perfect cooling.**
Thanks to its position, the radiator always works with clean air (dust from front and rear is avoided).

SPECIALIZATION AREA

# EARTH-MOVING

**Excavating, digging up, breaking, filling, leveling,** etc...
The Venieri UMAK fully satisfies all your working needs in every condition. Work in the best way and in the shortest time: this is our mission.







SPECIALIZATION AREA

# CONSTRUCTION

**Handling, trenching, excavating foundations, setting drainage beds, covering, levelling** etc...
A Venieri is so flexible and high-performing that no other operating machine is needed,
a Venieri UMAK is enough.











SPECIALIZATION AREA

# ROADS AND PIPING FOCUS



In road, highway or urban construction sites (inside town municipalities) the Venieri UMAK is the best solution which meets all your needs: **cleaning and removal road surface**, distribution of **stabilising materials**, **opening/closure of channels for pipes and cables**. An extremely high transfer speed, an exceptionally compact dimension, **as well as an incomparable turning radius** allow the operator to work **without stopping the traffic flow**.











SPECIALIZATION AREA

# MUNICIPALITIES, ARMY AND CIVIL DEFENSE



**Shredding, planting, cleaning ditches, removing snow, scattering anti-freeze substances or cleaning the road surface. Agility and speed**, combined with a proven ability to carry out different kinds of public works, make the Venieri UMAK an **ideal and cost-effective solution for municipalities, civil defense and the army.**









# Venieri GLOBAL

## CONTROL YOUR FLEET

***Venieri GLOBAL™*** *is our brand-new satellite monitoring system, which guarantees an increase in productivity by providing detailed information about the fleet and attachments, as well as an incredible amount of data to ensure the highest performance levels and greater economic efficiency.*

## AVAILABLE FEATURES

| | |
|---|---|
| Machine localisation | ✓ |
| Alerts history | ✓ |
| Maintenance plan | ✓ |
| Maintenance history | ✓ |
| Load information | ✓ |
| Working hours | ✓ |
| Security control (engine block) | O |
| Fuel consumption (total and partial) | ✓ |
| Fuel consumption while working | ✓ |
| Machine efficiency (while working) | ✓ |
| Detailed working hours | ✓ |
| Motion sensor alarm | ✓ |
| Curfew alarm setting | ✓ |

| | |
|---|---|
| Work shifts alarm | ✓ |
| Standard operating procedure history | O |
| Energy-saving guidelines history | O |
| Location log (map with locations and operating procedures) | ✓ |
| Information about diesel particulate filter | ✓ |
| Geo-fencing | ✓ |
| Localisation and managment fleet | ✓ |
| Multiuser control with specific access policies | ✓ |
| List of “sleeping” machines | ✓ |
| Sms/e-mail notification | ✓ |
| Anti-theft alarm | X |
| Parameters setting upon request | O |

✓ **Standad** **O Optional** **X Not available**

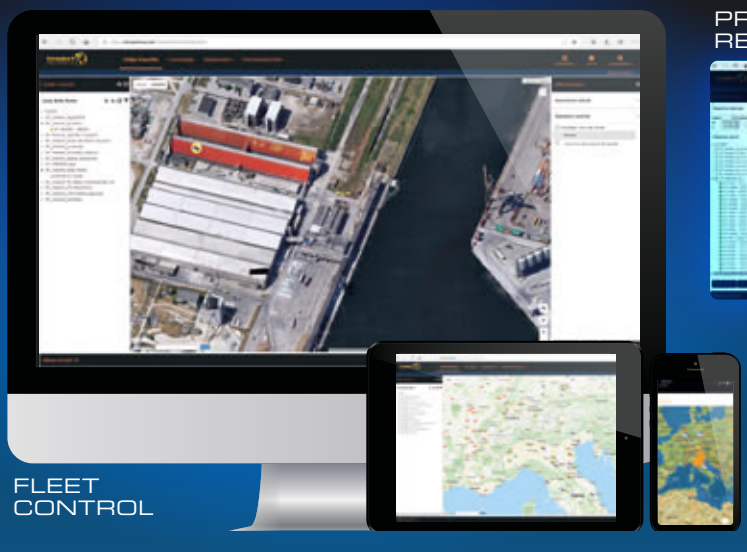

FLEET CONTROL

PRODUCTIVITY REPORT




REAL-TIME LOCALISATION



APP FOR SMARTPHONE iOS™ AND ANDROID™

# MAXIMUM POWER, ECO-FRIENDLY ENGINE.

## BRAND-NEW DEUTZ ENGINE TIER 4f

Venieri 8.23G & 10.23E are fitted with a DEUTZ TCD 3.6 L4 motor, which is a compact 4-cylinder in-line and water-cooled motor, for industrial and agricultural machinery, with a maximum power of 143 HP and aligned with EU and United States EPA Tier 4f requirements. Externally cooled turbocharged engine with intercooler and exhaust gas recirculation. 100% of the power available on flywheel and front. Up to two hydraulic drives can be installed on the PTO, with a total torque of up to 310 Nm.

## EXHAUST GAS MANAGEMENT

The exhaust gas management on this engine is DOC/DPF + SCR. DOC (Diesel Oxidation Catalyst) is a catalyst that reacts by contact with the engine exhaust gases, transforming its main components into substances that are not harmful to the environment. The DPF (Diesel Particulate Filter) is a DEUTZ diesel particulate filter, coated with noble metals and adapted to the installation needs of the individual customer application, which supports regular, safe and continuous regeneration, without the need for regular maintenance or additional operating fluids. The use of reliable turbocharger technology, especially compared to SCR-based EAT systems only, enables optimum engine performance throughout the entire rev range. A surface temperature of max. 250°C provides additional safety during operation. The SCR (Selective Catalytic Reduction) is a method for reducing NOx emissions. The basis of this technology is a 32.5% liquid urea solution, which is sprayed into the exhaust duct by a dedicated vanadium-or zeolite-coated catalyst. Urea produces ammonia (NH3) in a passive transformation which reacts with NOx and oxygen to form nitrogen and water.

## ENGINE MANAGEMENT

Engines equipped with DEUTZ Common Rail® injection communicate with the machine via a CAN-Bus protocol. This allows functions such as drive-by-wire and full engine control to be integrated into electronically controlled hydrostatic thrusters. The automatic electronic control also guarantees the integrated engine diagnosis and safety system. If the controller registers an abnormal motor status, as in the case of overheating, engine performance is reduced to emergency mode until it shuts down. This minimizes costly repairs, reduces equipment downtime and increases operational reliability.

## COMMON RAIL

The powerful Common Rail® injection system and the Electronic Engine Control (EMR) with smart connection to engine management ensure optimum engine performance with low fuel consumption.

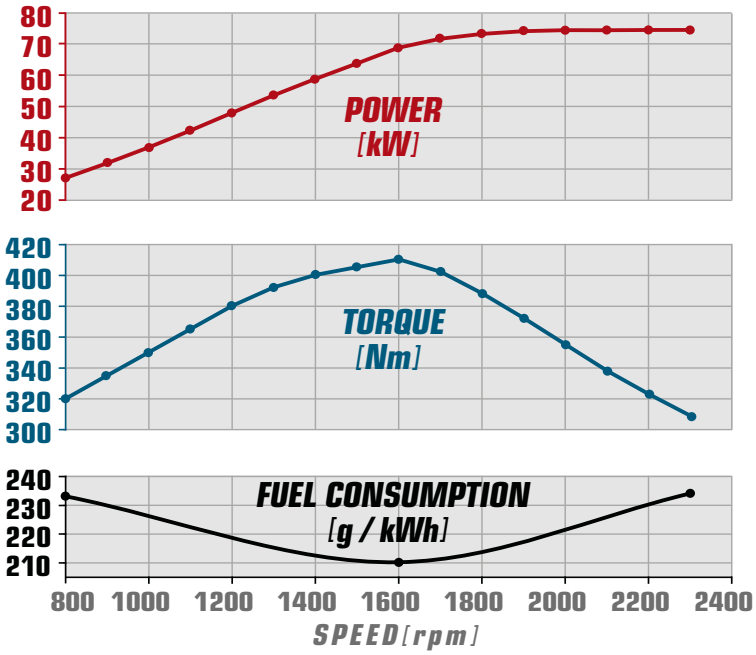


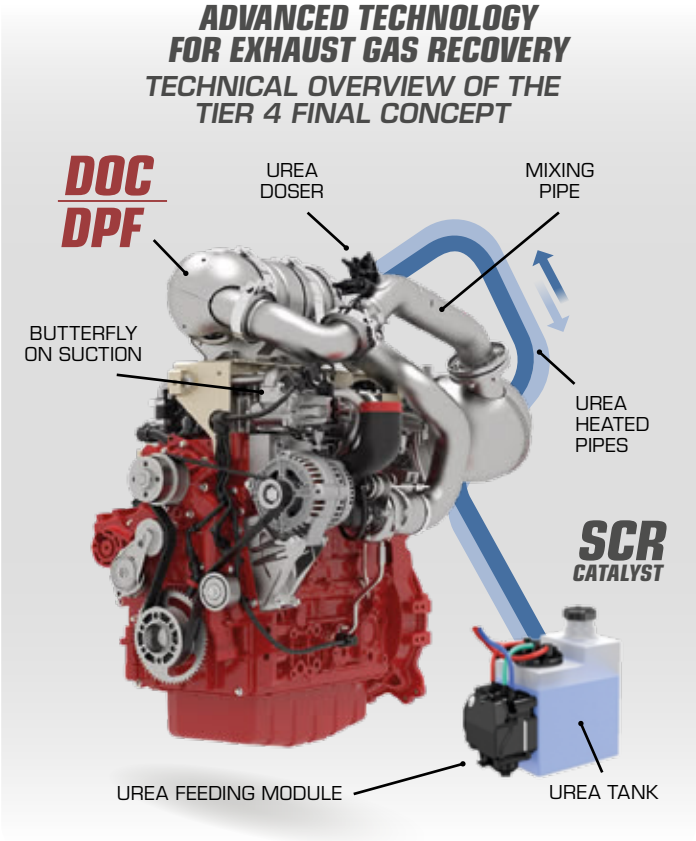

## BASIC MACHINE



| | 8.23G | 10.23E |
|---|---|---|
| Battery main switch | ✓ | ✓ |
| Tool box | ✓ | ✓ |
| Fuel preheating (cold climates) | O | O |
| Locking fuel filler cap | ✓ | ✓ |
| Proportional self lock front differential | O | O |
| Proportional self lock rear differential | ✓ | ✓ |
| Recovery hitch | ✓ | ✓ |
| Warning beacon | ✓ | ✓ |
| Twin beacons LED | O | O |
| Soundproofing | ✓ | ✓ |
| Spare parts calatogue | ✓ | ✓ |
| User manual | ✓ | ✓ |
| Type-approval for road traffic | ✓ | ✓ |
| Safety clamp for bucket and lifting cylinders | ✓ | ✓ |
| Safety block valves on lifting and bucket cylinders | O | O |
| Safety block valves on backhoe cylinders | O | O |
| Safety block valves on backhoe cylinders and overload device with eye for lifting | O | O |
| Loader servocontrol | O | O |
| Backhoe servocontrol | O | O |
| Speed selection on joystick | O | O |
| Transmission selector on steering column | ✓ | ✓ |
| 25 mph travel speed | ✓ | ✓ |
| "Venieri GLOBAL" system | O | O |
| Reversible fan (for radiator cleaning) | O | O |
| Double speed fan | ✓ | ✓ |
| Hydraulic negative parking brake | X | X |
| Service brake on both axles with separate circuits | O | ✓ |
| Automatic centralized greasing system | O | O |
| Ride control | O | O |
| Engine preheating system | O | O |
| Enviromentally-friendly hydraulic oil | O | O |
| Hydraulic oil ISO 46 (cold climates) | O | O |
| Cyclone dust separator | ✓ | ✓ |
| Air intake scavange system | X | X |
| Road lights front and rear | ✓ | ✓ |
| Reverse light | O | O |
| Plastic front and rear fenders | ✓ | ✓ |
| Hand throttle | ✓ | ✓ |

## CABIN EQUIPMENT



| | | |
|---|---|---|
| ROPS/FOPS 2nd Level, pressurized and soundproofed | ✓ | ✓ |
| Double entrance door | X | X |
| Front and rear windscreen wiper with washer | ✓ | ✓ |
| Halogen work lights (4 front + 2 rear) | ✓ | ✓ |
| LED work lights (4 front + 2 rear) | O | O |
| Mobile phone compartment | O | O |
| Bottle holder | ✓ | ✓ |
| Document compartment | ✓ | ✓ |
| Seat with mechanical suspension | ✓ | ✓ |
| Seat with pneumatic suspension | O | O |
| Seat with pneumatic suspension with heating | O | O |
| Seat armrests | O | O |
| Adjustable joystick control console and armerst | X | X |
| Buzzer | ✓ | ✓ |
| Cabin carpet | ✓ | ✓ |
| Radio preparation | ✓ | ✓ |
| Supplementary socket 12V | ✓ | ✓ |
| Manual Air Conditioning | O | O |
| "Climatronic Venieri" system | O | O |
| Ceiling lamp | ✓ | ✓ |
| Sun visor | O | O |
| Rear view mirrors | ✓ | ✓ |
| Heatable rear view mirrors | O | O |
| First-aid kit | O | O |
| Fire extinguisher 2kg | O | O |
| Seat belt | ✓ | ✓ |
| Instrumentation and dashboard with LCD display | ✓ | ✓ |
| Safety glass breaker | O | O |
| Tilt and telescopic steering column | ✓ | ✓ |
| Reverse camera with colour screen | O | O |

✓ Standard  O Optional  X Not available

## FRONT LOADER EQUIPMENT



| | 8.23G | 10.23E |
|---|---|---|
| Hydraulic quick coupler | O | O |
| Mechanical quick coupler | X | X |
| Digging bucket | O | O |
| High tipping bucket | O | O |
| Light material bucket | O | O |
| Cement mixing bucket | O | O |
| Multipurpose bucket (4 in 1) | O | O |
| 6 in 1 bucket | O | O |
| Hydraulic reach mowers | O | O |
| Asphalt planner | O | O |
| Snow blower | O | O |
| Lifting forks | O | O |
| Snow blade and “V” type snow blade | O | O |
| Angle-tilt dozer blade | O | O |
| Hand operating hammer | O | O |
| Polishing brush | O | O |
| Trencher | O | O |
| High flow kit | O | O |
| Unpressurized return pipe | O | O |
| Auxiliary line | O | O |
| Double auxiliary line | O | O |

## BACKHOE LOADER EQUIPMENT



| | | |
|---|---|---|
| Hydraulic quick coupler | O | O |
| Mechanical quick coupler | O | O |
| Digging bucket | O | O |
| Ditch cleaning | O | O |
| Trapezoidal bucket | O | O |
| Backhoe bucket with mechanical ejector | O | O |
| Brush cutters | O | O |
| Asphalt planner | O | O |
| Hydraulic Hammer | O | O |
| Hydraulic augers | O | O |
| Hydraulic line single effect (for hammer) | O | O |
| Hydraulic line double effect (for augers) | O | O |
| Backhoe quick disengagement (including counterweights) | O | O |
| Extending dipperstick | O | O |
| Rubber pads for stabilizers feet | O | O |
| ISO / SAE (PILOT) configuration | O | O |
| Hydraulic side shift | O | O |

✓ Standard  **O** Optional  **X** Not available















*The illustrations on the present folder do not necessarily show the product standard version. Data and dimensions described in this folder are not binding. Venieri reserves the right of carrying out possible changes at any time and without previous notice because of its policy of steady developement and improvement of the products.*

(2025) UPUMAK-US_IMPERIAL proartegrafica.it

100% MADE IN ITALY

MOTOR VALLEY

QUALITY SYSTEM CERTIFICATION DNV ISO 9001

ENVIRONMENTAL SYSTEM CERTIFICATION DNV ISO 14001

Venieri SPA
EARTHMOVING MACHINES

**VF Venieri S.p.A. a Socio Unico**
Via Piratello, 106 - 48022 Lugo (RA) - ITALY
Tel. +39 0545 904411
e-mail: info@vf-venieri.com | **www.vf-venieri.com**

***Spare Parts***
Tel. +39 0545 904429
e-mail: ricambi1@vf-venieri.com